HC-49USM Crystal (FOUR PADS)

•Part Number Guide

T-M-FF.FFFM-LC-FTFS-OT-ESR-TR-S

T (Type型号) : MB=HC-49USM 4 Pads with height of 5.0mm Max
MB2=HC-49USM 4 Pads with height of 4.5mm Max
M (Mode of Operation振荡模式) : F=Fundamental T=Third Overtone, etc
F (Frequency标称频率) : Normal – 5 digitals of Frequency, e.g. 8.0000M, 12.000M
Special – All digitals of Frequency, e.g. 13.225625M
LC (Load Capacitance负载电容) : 20=20pf 00=series, etc
FT (Frequency Tolerance调整频差) : 30=±30 ppm, etc
FS (Frequency Stability温度频差) : 50=±50 ppm, etc
OT (Operating Temperature工作温度) : 1060=−10°C to +60°C 4085=−40°C to +85°C, etc
ESR (Equivalent Series Resistance等效阻抗)
TR (Tape and Reel编带)
S (Special Requirement特殊要求)

Pb Free

RoHS Compliant Directive 2002/95/EC

•Electrical Specifications 电气参数

型号	Holder Type	HC – 49USM 4Pads
频率范围	Frequency Range	3.5700MHz to 130.00MHz ※(See Notes)
调整频差	Frequency Tolerance (△F) (at25°C)	±10ppm to ±100ppm
温度频差	Frequency Stability	±10ppm to ±100ppm
工作温度范围	Operating Temperature Range	−10°C ~ +60°C to −40°C ~ +85°C
储存温度范围	Storage Temperature Range	−40°C ~ +85°C / −55°C ~ +125°C
老化	Aging (25°C)	±5ppm/year Maximum
静电容	Shunt Capacitance (C0)	7pF Maximum
激励功率	Drive Level	100μW Typical
绝缘阻抗	Insulation Resistance (Rs)	500 Megaohms Minimum at D.C 100V
负载电容	Load Capacitance (CL)	Suggested by customer

※Notes: For 4.5mm height, lowest frequency is 10 MHz

•Equivalent Series Resistance and Mode of Operation 等效阻抗和振荡模式

Frequency Range 频率范围	ESR (Ω) 等效阻抗	Mode 振荡模式
3.5700 – 4.0000MHz	150Max	Fundamental
4.0000 – 5.0000MHz	120Max	Fundamental
5.0000 – 6.0000MHz	100Max	Fundamental
6.0000 – 7.0000MHz	80Max	Fundamental
7.0000 – 10.000MHz	60Max	Fundamental
10.000 – 14.000MHz	50Max	Fundamental
14.000 – 20.000MHz	40Max	Fundamental
≥20.000MHz	30/40 (BT cut) Max	Fundamental
24.000 – 35.000MHz	100Max	Third Overtone
≥35.000MHz	80Max	Third Overtone

•Mechanical Dimensions 外型尺寸

Drawing For MB

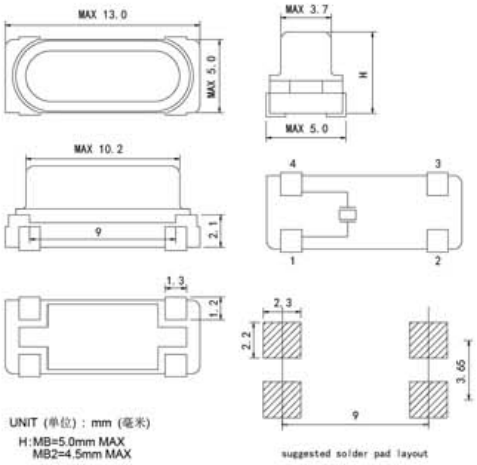

•Reflow Condition 回流焊条件

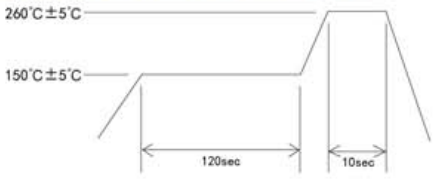

CYCLE TIME:200sec Max.