5x7 SMD OSCILLATOR(HCMOS/TTL)

•Part Number Guide

T-V-S-FF.FFFM- FS-OT-OP -TR-S

T(Type型号):0=5×7×1.4mm Max ceramic osc
OF=5×7×1.4mm Max ceramic osc(side pad)
V(Input Voltage输入电压):1.8=1.8V 2.5=2.5V 2.85=2.85V 3=3.3V 5=5.0V, etc
S(Symmetry占空比):5=45/55 Max 6=40/60 Max
F(Frequency标称频率):Normal – 5 digitals of Frequency, e.g. 8.0000M, 12.000M
Special – All digitals of Frequency, e.g. 13.225625M
FS(Frequency Stability总频差):50=±50 ppm, etc
OT(Operating Temperature工作温度):0070= 0°C to +70°C 4085= −40°C to +85°C, etc
OP(Output输出):1=15PF HCMOS 2=10TTL 3=30PF 4=50PF 5=10TTL/15PF
TR(Tape and Reel编带)
S(Special Requirement特殊要求)

Pb Free

RoHS Compliant Directive 2002/95/EC

•Electrical Specifications 电气参数

型号	Holder Type	5x7mm SMD OSCILLATOR
频率范围	Frequency Range	1.0000 MHz to 150.00 MHz
总频差	Frequency Stability	±25ppm to ±50ppm
输入电压	Supply Voltage	5.0V or 3.3V ±10%
工作温度范围	Operating Temperature Range	−10°C ~ +60°C to −40°C ~ +85°C
储存温度范围	Storage Temperature Range	−40°C ~ +85°C/−55°C ~ +125°C
占空比	Symmetry (Duty Cycle)	40/60 Standard
输出	Output Load	10 TTL or 15pF HCMOS
消耗电流	Current Consumption	
	1.8V/3.3V/5.0V	1.0000MHz−10.000MHz=10mA Max
	1.8V/3.3V/5.0V	10.000MHz−40.000MHz=20mA Max
	1.8V/3.3V	40.000MHz−60.000MHz=30mA Max
	5.0V	40.000MHz−60.000MHz=35mA Max
	1.8V/3.3V	60.000MHz−100.00MHz=40mA Max
	5.0V	60.000MHz−100.00MHz=60mA Max
	1.8V/3.3V	>100.00MHz=60mA Max
	5.0V	>100.00MHz=70mA Max
上升/下降时间	Rise/Fall Time	10nS Max

•Mechanical Dimensions 外型尺寸

UNIT(单位):mm(毫米)

Drawing For O

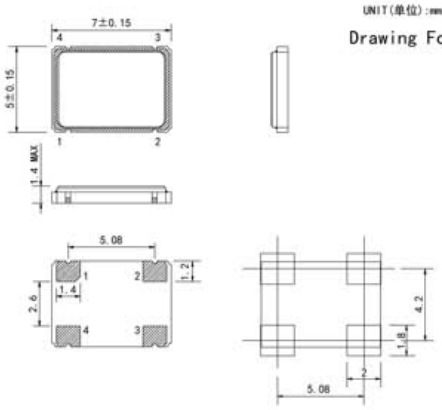

Drawing For OF

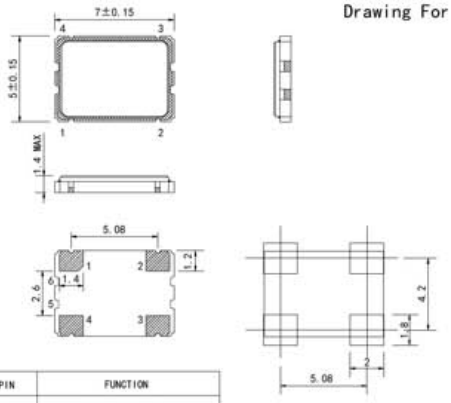

suggested solder pad layout

PIN	FUNCTION
1	N/C or Tri-state
2	Ground
3	Output
4	Vdd
5	Crystal
6	Crystal

•Test Circuit 测试电路

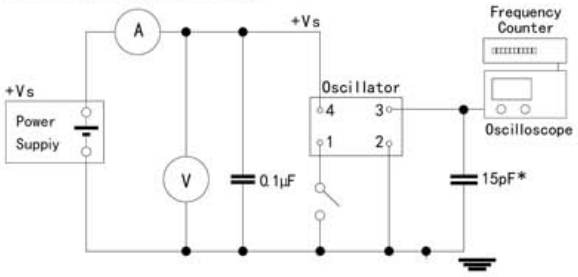

•Reflow Condition 回流焊条件

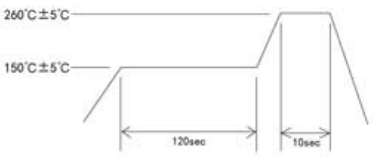

CYCLE TIME:200sec Max.